EMC TEST REPORT

Equipment	Infrared Thermometer
Trademark	MACREA
Model No.	E300
Serial No.	N/A
Report No.	CTB200316018EX
Applicant	SHENZHEN SINOPILOT SUPPLY CHAIN CO.,LTD RM1106,A2 Building Kexing Science and Technology Park Keyuan Mid-RD no.15 Nanshan District Shenzhen,China
Manufacturer	Suzhou yaoteng Medical Equipment Co., Ltd Building 8, 1258 Jinfeng South Road, Mudu Town, Wuzhong District, Suzhou City, Jiangsu Province
Prepared by	Shenzhen CTB Testing Technology Co., Ltd. Floor 1&2, Building A, No. 26 of Xinhe Road, Xinqiao Street, Baoan District, Shenzhen China Tel: 086-4008-258-12 Fax: 086-0755-23208027
Date of Receipt	Mar. 14, 2020
Date of Test(s)	Mar. 14, 2020 ~ Mar. 16, 2020
Date of Issue	Mar. 16, 2020
Test Standard(s)	EN 61326-1:2013

In the configuration tested, the EUT complied with the standards specified above.

Producer : Amy Yang , Date : Mar. 16, 2020

Amy Yang/ Engineer

Signatory : Sherwin Qian , Date : Mar. 16, 2020

Sherwin Qian/ Director

Note: The results shown in this test report refer only to the sample(s) tested unless otherwise stated. This test report shall not be reproduced except in full, without prior written approval of CTB. This document may be altered or revised by CTB, personnel only, and shall be noted in the revision of the document.

Revision History

Rev.	Issue Date	Revisions	Effect Page	Revised By
0	Mar. 16, 2020	Initial Issue	All Page	Sherwin Qian

Table of Contents

1. TEST SUMMARY 4
2. GENERAL INFORMATION 5
   2.1. Description of EUT 5
   2.2. Operating condition of EUT 6
   2.3. Test conditions 6
   2.4. Block diagram of EUT configuration 6
3. FACILITIES 7
   3.1. Test Facility 7
   3.2. Test Instruments 7
4. Measurement uncertainty 8
5. Emission 9
   5.1. Mains terminal disturbance voltage 9
   5.2. Radiated emissions 10
   5.3. Harmonic current emissions 13
   5.4. Voltage changes, voltage fluctuations and flicker 14
6. Immunity 15
   6.1. Electrostatic discharges (ESD) 16
   6.2. Electromagnetic field 18
   6.3. Electrical fast transients/burst (EFT/B) 19
   6.4. Surges 21
   6.5. Conducted RF 22
   6.6. Power frequency magnetic field 24
   6.7. Voltage dips and Short interruptions 25
7. Photographs of EUT 26

1. TEST SUMMARY

Emission			
Requirement - Test	Test Method	Limit	Result
Conducted Emission	EN 55011:2009+A1:2010	Class B	N/A
Radiated emissions at frequencies up to 1 GHz		Class B	PASS
Harmonic current emissions	EN 61000-3-2:2014	Class A	N/A
Voltage changes, voltage fluctuations and flicker	EN 61000-3-3:2013	Clause 5	N/A
Immunity			
Requirement - Test	Test Method	Performance criteria	Result
Electrostatic discharges (ESD)	EN 61000-4-2:2009	B	PASS
Electromagnetic field	EN 61000-4-3:2006+A1:2008+A2:2010	A	PASS
Electrical fast transients/burst (EFT/B)	EN 61000-4-4:2004+A1:2010	B	N/A
Surges	EN 61000-4-5:2006	B	N/A
Conducted RF	EN 61000-4-6:2009	A	N/A
Power frequency magnetic field	EN 61000-4-8:2010	A	N/A
Voltage dips and Short interruptions	EN 61000-4-11:2009+A1:2010	B & C	N/A

Remark: N/A is abbreviation for Not Applicable.

The test was carried out in all the test modes, only the worst data are list in report.

2. GENERAL INFORMATION

2.1. Description of EUT

Equipment	Infrared Thermometer
Trademark	MACREA
Model Name	E300
Serial No.	Not labeled
Model Difference	N/A
Rated Power Supply	DC3V
Rated Power	N/A
Normal Testing Voltage	DC3V
Configuration	☒ Table-top ☐ Floor-standing
Accessory Device	N/A
Cable Supplied	N/A

1. The above EUT information is declared by manufacturer and for more detailed features description, please refer to the manufacturer's specifications or the User's Manual.

2.2. Operating condition of EUT

Test mode	Description
1	Working
2	
3	
4	

2.3. Test conditions

Temperature: 15-35℃
Relative Humidity: 30-60 %
Atmospheric pressure: 800hPa-1060hPa

2.4. Block diagram of EUT configuration

EUT

3. FACILITIES

3.1. Test Facility

CTB-LAB

Floor 1&2, Building A, No. 26 of Xinhe Road, Xinqiao Street, Baoan District, Shenzhen China

3.2. Test Instruments

Conducted Emission Measurement (Test software: EZ-EMC Ver. EMC-con3A1.1)

Item	Equipment	Manufacturer	Model No.	Serial No.	Calibrated until
1	AMN	ROHDE&SCHWARZ	ESH3-Z5	831551852	20201030
2	Pulse limiter	ROHDE&SCHWARZ	ESH3Z2	357881052	20201030
3	EMI TEST RECEIVER	ROHDE&SCHWARZ	ESCI	100428/003	20201102
4	Coaxial cable	ZDECL	Z302S	18091904	20201030
5	AAN	Schwarzbeck	NTFM8158	183	20200506

Radiated Emission Measurement (Test software: EZ-EMC Ver. FA-03A2 RE)

Item	Equipment	Manufacturer	Model No.	Serial No.	Calibrated until
1	TRILOG Broadband Antenna	Schwarzbeck	VULB 9168	869	20201102
2	Amplifier	HP	8447E	2945A02747	20201101
3	EMI TEST RECEIVER	ROHDE&SCHWARZ	ESPI7	100362	20201101
4	Coaxial cable	ETS	RFC-SNS-100 -NMS-80 NI	/	20201101
5	Coaxial cable	ETS	RFC-SNS-100 -NMS-20 NI	/	20201101
6	Coaxial cable	ETS	RFC-SNS-100 -SMS-20 NI	/	20201101
7	Coaxial cable	ETS	RFC-NNS-10 0-NMS-300 NI	/	20201101

Harmonic Current & Voltage Fluctuation and Flicker (Test software: TTI HA1600 Ver.3.01)

Item	Equipment	Manufacturer	Model No.	Serial No.	Calibrated until
1	Power Analyzer	Laplace Instruments	AC2000A	311363	20201223
2	AC Power source	HTEC Instruments	HPF5010	633088	20201223

Electrostatic Discharge Test

Item	Equipment	Manufacturer	Model No.	Serial No.	Calibrated until
1	ESD Simulator	TESTQ	NSG437	329	20201030

RF electromagnetic field Test

Item	Equipment	Manufacturer	Type No.	Serial No.	Calibrated until
1	Signal Generator	Agilent	N5182A	MY47420195	20201030
2	Log-Bicon Antenna	Schwarzbeck	VULB9161	9128ES-128	20201030
3	Power Amplifier	AR	150W1000M1	342526	20201030

4	Microwave Horn Antenna	AR	AT4002A	322279	20201030
5	Power Amplifier	AR	25S1G4A	321116	20201030

4. Measurement uncertainty

The following table is for the measurement uncertainty, which is calculated as per the document CISPR 16-4.

Test	Parameters	Expanded Uncertainty (U_{Lab})	Expanded Uncertainty (U_{Cispr})
Conducted Emission	Level Accuracy: 150kHz to 30MHz	±1.22 dB	±3.6 dB
Radiated Emission	Level Accuracy: 30MHz to 1000 MHz	±3.67 dB	±5.2 dB
Radiated Emission	Level Accuracy: Above 1000MHz	±4.79 dB	N/A

This uncertainty represents an expanded uncertainty expressed at approximately the 95% confidence level using a coverage factor of k=2.

5. Emission

5.1. Mains terminal disturbance voltage

5.1.1. Limit

Frequency range MHz	Detector type / bandwidth	Class B limits dB(μV)
0,15 to 0,5	Quasi Peak / 9 kHz	66 to 56
0,5 to 5		56
5 to 30		60
0,15 to 0,5	Average / 9 kHz	56 to 46
0,5 to 5		46
5 to 30		50

5.1.2. Test setup

For table-top equipment

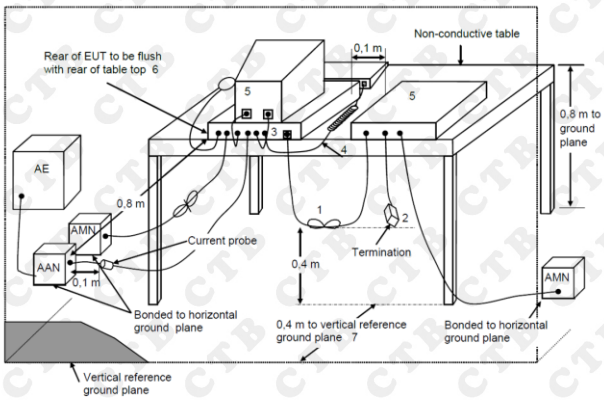

For floor standing equipment

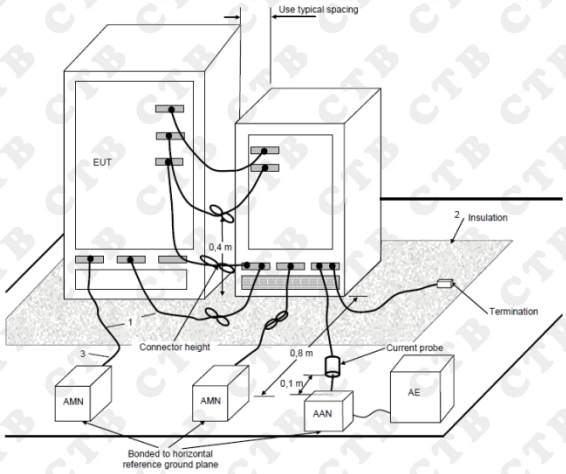

5.1.3. Test procedure

Measurement was performed in shielded room, and instruments used were followed CISPR 16-2-1 clause7.
Detailed test procedure was following clause 7 of CISPR 16-2-1.
Frequency range 150kHz – 30MHz was checked and EMI receiver measurement bandwidth was set to 9 kHz.

5.1.4. Test results

N/A

5.2. Radiated emissions

5.2.1. Limit

Frequency range MHz	Measurement			Class B limits dB(μV/m)
	Facility	Distance m	Detector type / bandwidth	
30 to 230	SAC	3	Quasi Peak / 120 kHz	40
230 to 1 000				47

5.2.2. Block diagram of test setup

Measurement distance

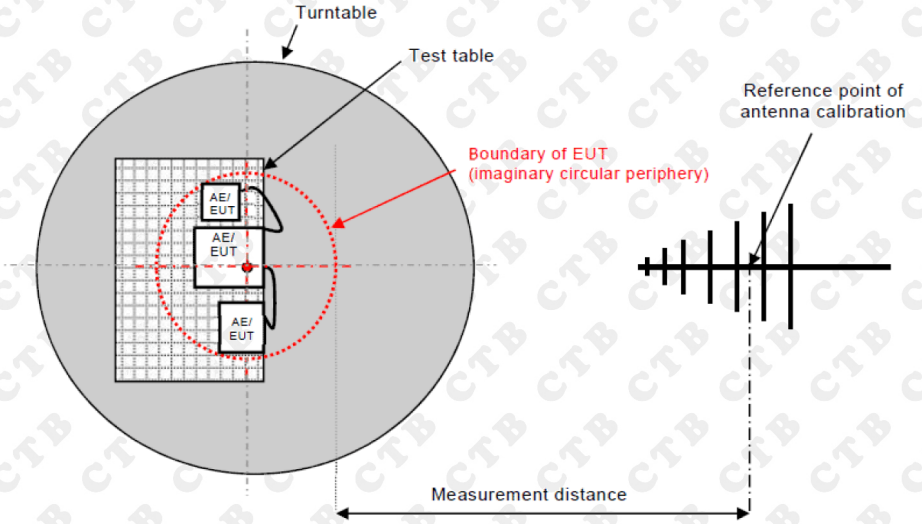

For table-top equipment

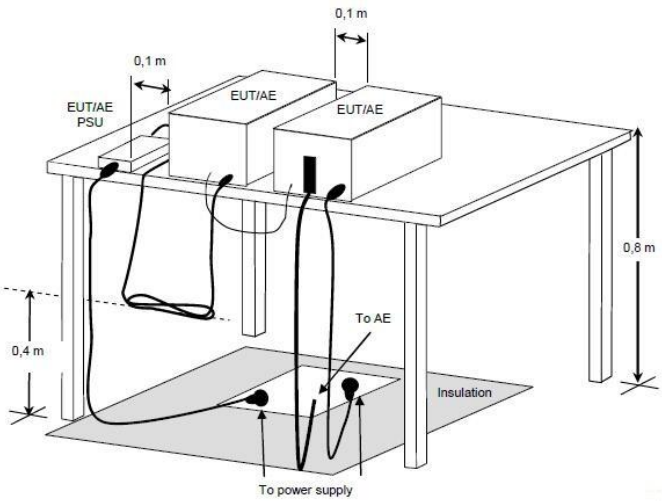

For floor standing equipment

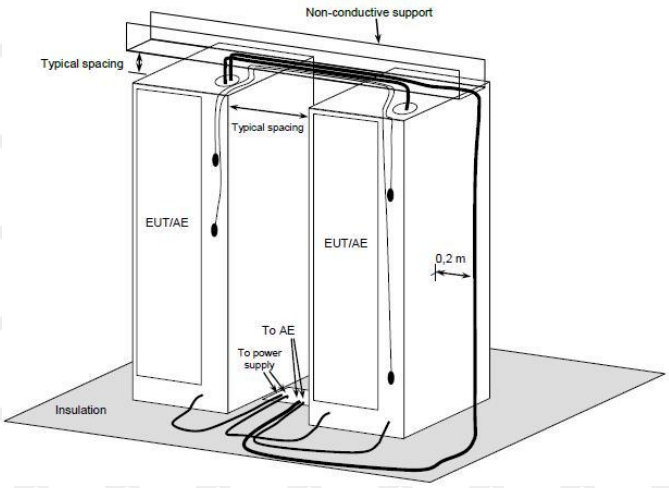

5.2.3. Test procedure

The measurement was performed in a semi-anechoic chamber.
The distance from EUT to receiving antenna is 3 meters.
Measurement was performed according to clause 7.3 of CISPR 16-2-3.

5.2.4. Test results

PASS

Please refer to the following page.

Polarization: H

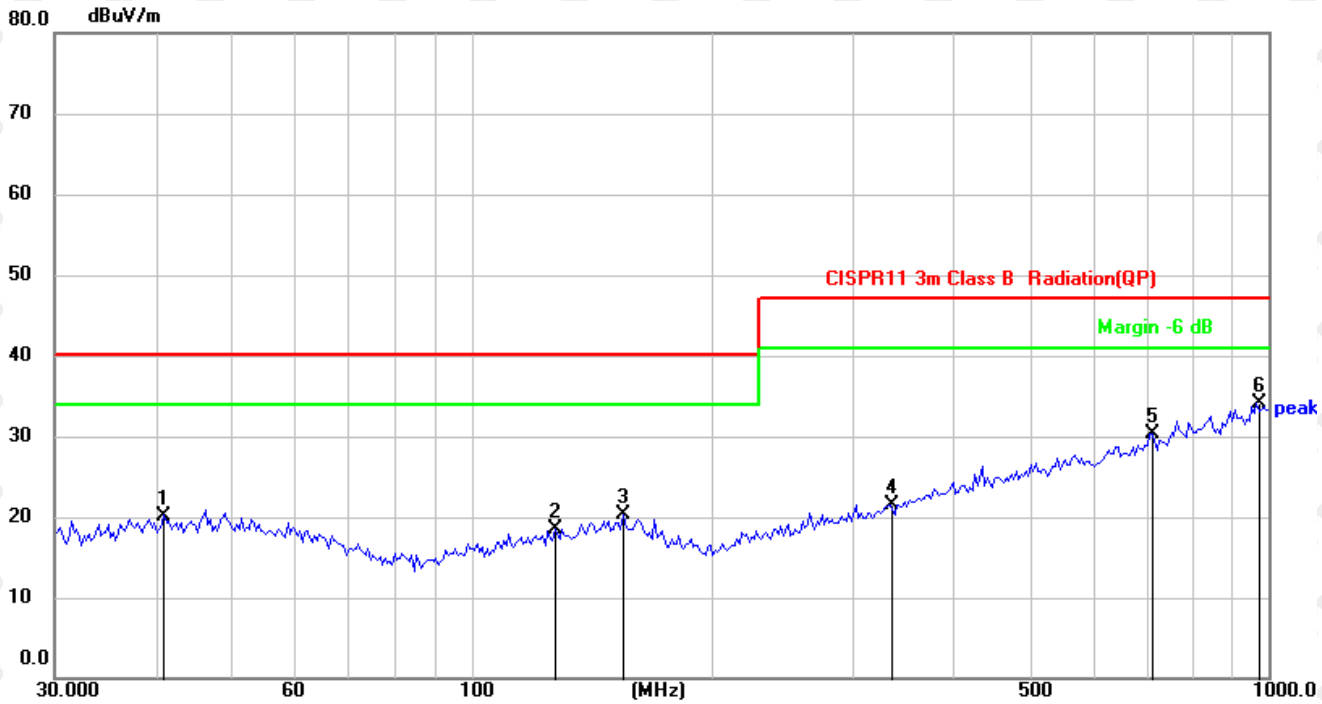

No.	Mk.	Freq.	Reading Level	Correct Factor	Measure-ment	Limit	Margin	
		MHz	dBuV	dB/m	dBuV/m	dB/m	dB	Detector
1		41.1320	25.96	-5.76	20.20	40.00	-19.80	peak
2		127.2176	25.80	-7.30	18.50	40.00	-21.50	peak
3		154.8204	26.60	-6.28	20.32	40.00	-19.68	peak
4		334.8589	25.80	-4.28	21.52	47.00	-25.48	peak
5		709.1823	26.43	3.93	30.36	47.00	-16.64	peak
6	*	965.5421	26.38	7.77	34.15	47.00	-12.85	peak

Note: Result=Reading+Factor
Over Limit=Result-Limit

Polarization: V

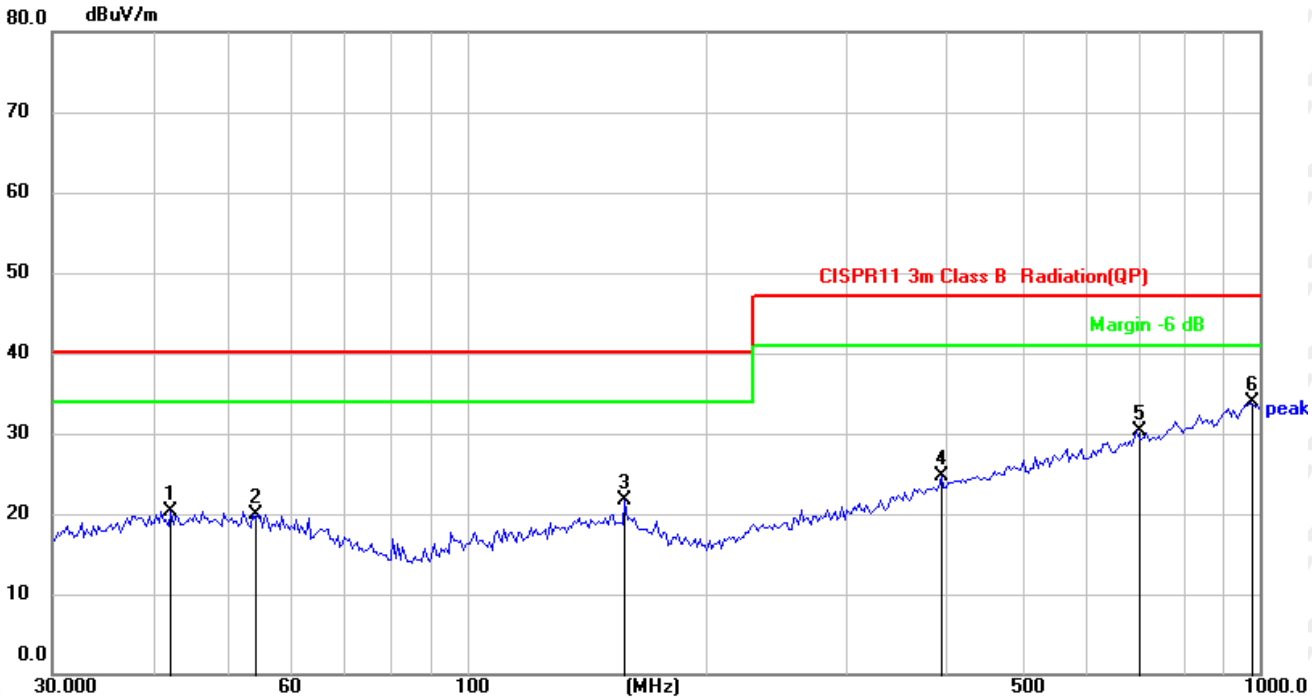

No.	Mk.	Freq.	Reading Level	Correct Factor	Measure-ment	Limit	Margin	
		MHz	dBuV	dB/m	dBuV/m	dB/m	dB	Detector
1		42.3022	26.10	-5.77	20.33	40.00	-19.67	peak
2		53.6932	26.25	-6.35	19.90	40.00	-20.10	peak
3		158.1123	28.02	-6.25	21.77	40.00	-18.23	peak
4		396.2415	26.93	-2.24	24.69	47.00	-22.31	peak
5		699.3046	26.61	3.71	30.32	47.00	-16.68	peak
6	*	972.3374	26.14	7.84	33.98	47.00	-13.02	peak

Note: Result=Reading+Factor
Over Limit=Result-Limit

5.3. Harmonic current emissions

5.3.1. Test Setup

5.3.2. Test Procedure

Basic Standard(s)	:	EN 61000-3-2:2014
Measurement Equipment requirement	:	IEC 61000-4-7
Measured Harmonics	:	1 - 40
Equipment Class	:	☐ A ☐ B ☐ C ☐ D
Limits	:	☐ Clause 7.1 Table 1
		☐ Clause 7.2
		☐ Clause 7.3 Table 2
		☐ Clause 7.4 Table 3

☐ This product is not defined as lighting equipment, and has rated power less than 75W, therefore, no limit applies according to EN 61000-3-2

☐ The EUT is kitchen machines as listed in the scope of IEC 60335-2-14, therefore, is deemed to conform to the harmonic current limits of this standard without further testing.

5.3.3. Test Result

N/A

5.4. Voltage changes, voltage fluctuations and flicker

5.4.1. Test Setup

5.4.2. Test Procedure

Basic Standard(s)	:	EN 61000-3-3:2013
Measurement Equipment requirement	:	IEC 61000-4-15
Limits	:	Clause 5

5.4.2.1 Definition

Flicker: impression of unsteadiness of visual sensation induced by a lighting stimulus whose luminance or spectral distribution fluctuates with time.

P_{st}: Short-term flicker indicator the flicker severity evaluated over a short period (in minutes); P_{st}=1 is the conventional threshold of irritability

P_{lt}: long-term flicker indicator; the flicker severity evaluated over a long period (a few hours) using successive P_{st} values.

dc: the relative steady-state voltage change

d_{max}: the maximum relative voltage change

d(t): the value during a voltage change

5.4.2.2 Test Precedure

The following limits apply

-- "P_{lt}" shall not exceed 0.65.

-- "P_{st}" shall not exceed 1.0.

-- "dc" shall not exceed 3.3%.

-- "d(t)" shall not exceed 3.3% for more than 500ms.

-- "d_{max}" shall not exceed:

☐ 4% without additional conditions,

☐ 6% switched manually or automatically more than twice per day,

☐ 7% attended whilst in use or switched automatically for no more than twice per day or attended while in use.

☐ For manual switch, dmax is measured in accordance with Annex B of standard, average dmax is calculated from 24 times measurement.

☒ The EUT is unlikely to produce significant voltage fluctuations or flicker by technical analysis and evaluation. So it is deemed to fulfil the requirements without testing.

5.4.3. Test Result

N/A

6. Immunity

Performance criteria

Performance criterion **A**

The equipment shall continue to operate as intended without operator intervention. No degradation of performance or loss function is allowed below a performance level specified by the manufacturer, when the equipment is used as intended. The performance level may be replaced by a permissible loss of performance. If the minimum performance level or the permissible performance loss is not specified by the manufacturer, then either of these may be derived from the product description and documentation, and by what the user may reasonably expect from the equipment if used as intended.

Performance criterion **B**

The equipment shall continue to operate as intended after the test. No degradation of performance or loss function is allowed below a performance level specified by the manufacturer, when the equipment is used as intended. During the test, degradation of performance is however allowed. No change of actual operating state or stored data is allowed. If the minimum performance level or the permissible performance loss is specified by the manufacturer, either of these may be derived from the product description and documentation and what the user may reasonably expect from equipment if used as intended.

Performance criterion **C**

Temporary loss of function is allowed, provided the function is self-recoverable or can be restored by operation of the controls.

6.1. Electrostatic discharges (ESD)

6.1.1. Test Levels and Performance Criterion

Characteristics	Test levels
Air discharge	±8 kV
Contact discharge	±4 kV

Performance criterion: **B**

6.1.2. Test setup

For table-top equipment

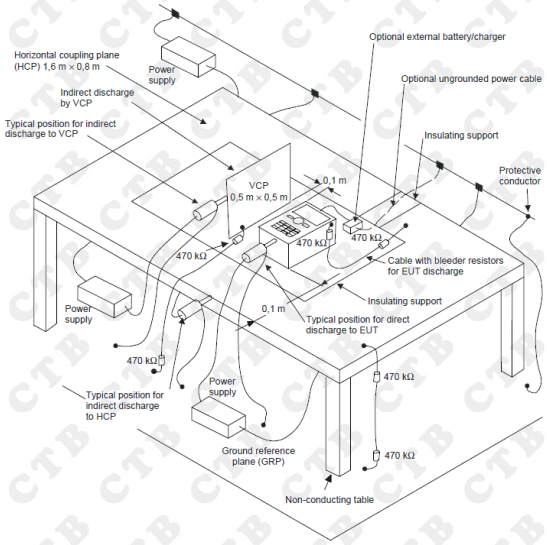

For floor standing equipment

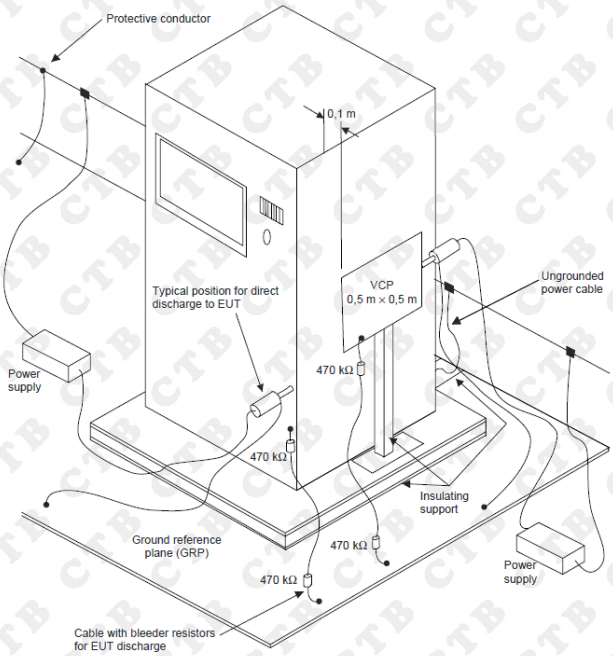

6.1.3. Test Procedure

Measurement was performed in shielded room.
Measurement procedure was applied according to EN 61000-4-2 clause 8.
The test method and equipment were specified by EN 61000-4-2.

6.1.4. Test Result

PASS
Please refer to the following page.

No.	Location of discharge	Polarity	Discharge	Number of discharges	Test level kV	Result
1	HCP top side	P&N	C	25	4	PASS
3	HCP bottom side	P&N	C	25	4	PASS
5	VCP right side	P&N	C	25	4	PASS
7	VCP left side	P&N	C	25	4	PASS
9	Points on conductive surface	P&N	C	25	4	PASS
10	Points on non-conductive surface	P&N	A	10	8	PASS

HCP = Horizontal coupling plate VCP = Vertical coupling plate N = Negative P = Positive
A = Air discharge C = Contact discharge

6.2. Electromagnetic field

6.2.1. Test Levels and Performance Criterion

Characteristics	Test levels	Test levels
Frequency range	80 MHz to 1 000 MHz, 1.4GHz to 2 GHz	2GHz to 2.7GHz
Test level	3 V/m (unmodulated)	1 V/m (unmodulated)
Modulation	1 kHz, 80 % AM, sine wave	1 kHz, 80 % AM, sine wave

Performance criterion: **A**

6.2.2. Test setup

For table-top equipment

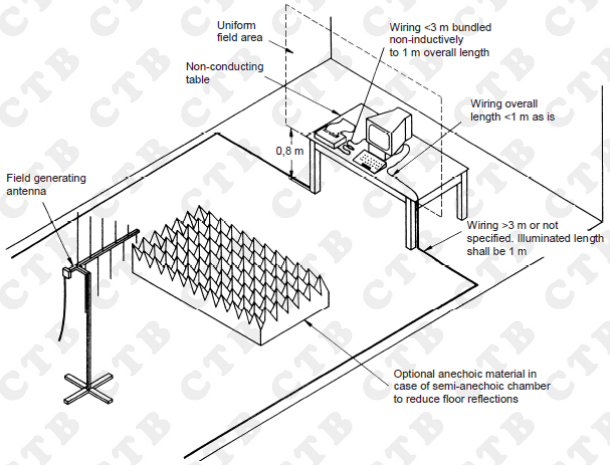

For floor standing equipment

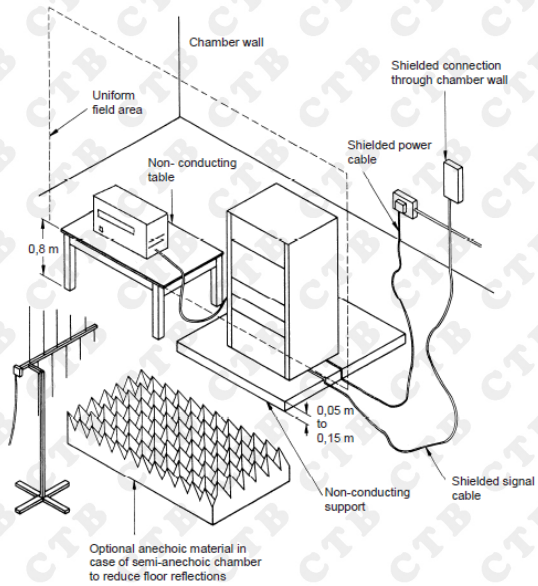

6.2.3. Test Procedure

Measurement was performed in full-anechoic chamber.
Measurement procedure was applied according to EN 61000-4-3 clause 8.
The test method and equipment was specified by EN 61000-4-3.

6.2.4. Test Result

PASS

Enclosure	Horizontal	Vertical
Front	PASS	PASS
Right Side	PASS	PASS
Left Side	PASS	PASS
Rear	PASS	PASS

6.3. Electrical fast transients/burst (EFT/B)

6.3.1. Test Levels and Performance Criterion

Severity Level 2 for signal and control ports
Severity Level 2 for input and output DC power ports
Severity Level 2 for input and output AC power ports

Open circuit output test voltage and repetition frequency of the impulses				
Level	Power ports, earth port (PE)		Signal, and control ports	
	Voltage peak kV	Repetition frequency kHz	Voltage peak kV	Repetition frequency kHz
1	0,5	5 or 100	0,25	5 or 100
2	1	5 or 100	0,5	5 or 100
3	2	5 or 100	1	5 or 100
4	4	5 or 100	2	5 or 100
X[a]	Special	Special	Special	Special
The use of 5 kHz repetition frequency is traditional, however, 100 kHz is closer to reality. Product committees should determine which frequencies are relevant for specific products or product types. With some products, there may be no clear distinction between power ports and signal ports, in which case it is up to product committees to make this determination for test purposes.				
[a] "X" can be any level, above, below or in between the others. The level shall be specified in the dedicated equipment specification.				

Performance criterion: **B**

6.3.2. Test setup

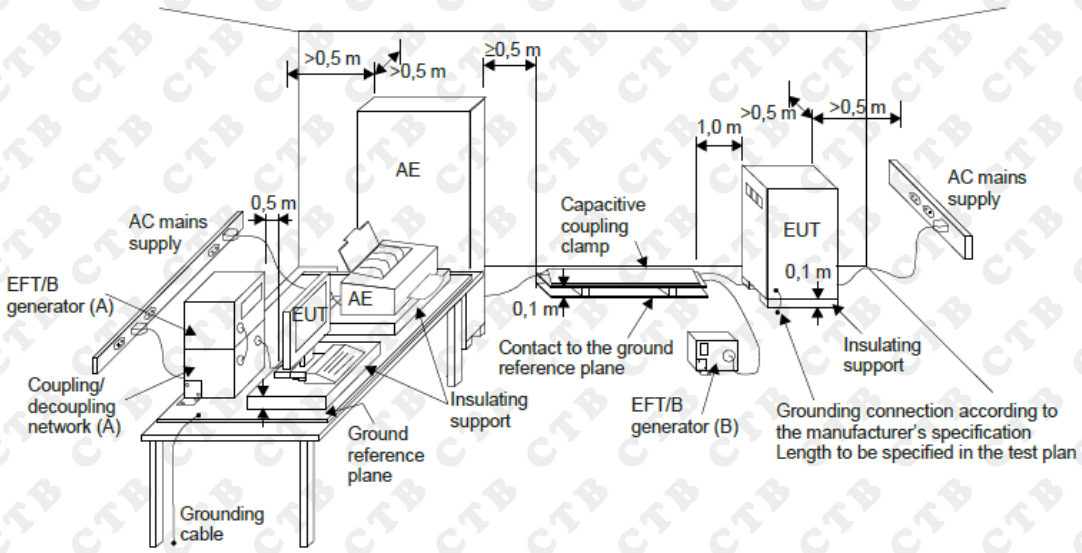

6.3.3. Test Procedure

Measurement was performed in shielded room.
Measurement procedure was applied according to EN 61000-4-4 clause 8.
The test method and equipment was specified by EN 61000-4-4.

6.3.4. Test Result

N/A

6.4. Surges

6.4.1. Test Levels and Performance Criterion

Severity Level 2 for line to line 1.0KV, Severity Level 2 for line to ground at 2.0KV

Level	Open-circuit test voltage ±10% (kV)
1	0,5
2	1
3	2
4	4
X [a]	Special
[a] "X" can be any level, above, below or in between the others. The level shall be specified in the dedicated equipment specification.	

Performance criterion: **B**

6.4.2. Test setup

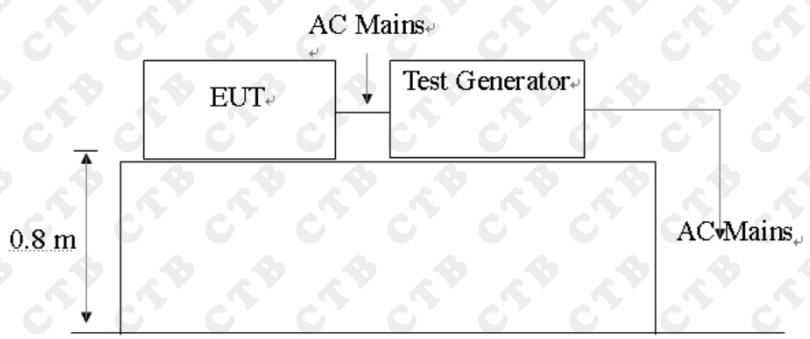

6.4.3. Test Procedure

Measurement was performed in shielded room.
Measurement procedure was applied according to EN 61000-4-5 clause 8.
The test method and equipment was specified by EN 61000-4-5.

6.4.4. Test Result

N/A

6.5. Conducted RF

6.5.1. Test Levels and Performance Criterion

Severity Level 2

Frequency range 150 kHz ± 80 MHz		
Level	Voltage level (e.m.f.)	
	U0 dB(μV)	U0 V
1	120	1
2	130	3
3	140	10
X a	Special	
[a] X is an open level.		

Performance criterion: **A**

6.5.2. Test setup

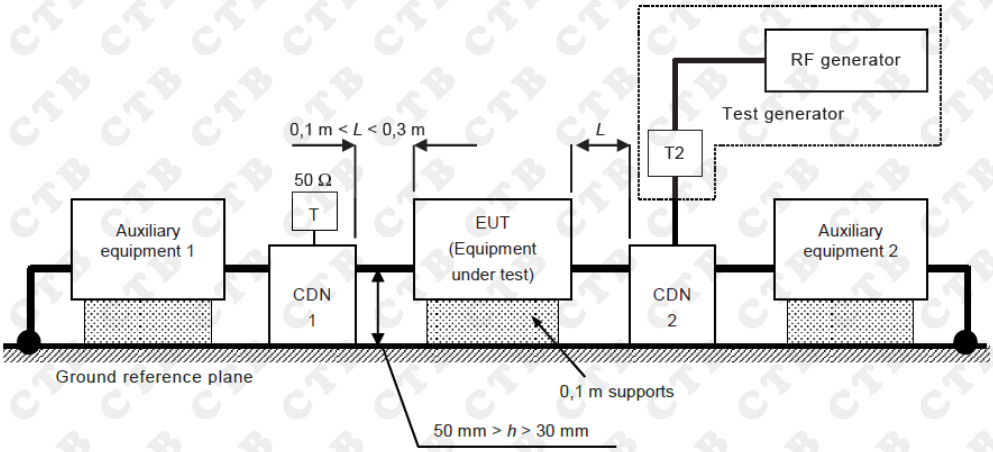

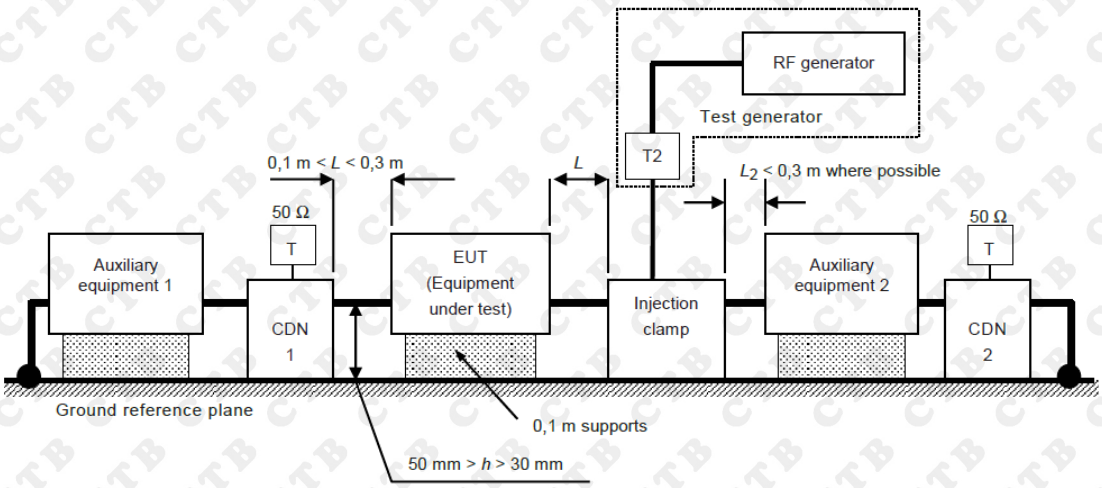

6.5.3. Test Procedure

Measurement procedure was applied according to EN 61000-4-6 clause 8.
The test method and equipment was specified by EN 61000-4-6.

6.5.4. Test Result

N/A

6.6. Power frequency magnetic field

6.6.1. Test Levels and Performance Criterion

Severity Level 2

Level	Magnetic field strength (A/m)
1	1
2	3
3	10
4	30
5	100
X [a]	Special
[a] "X" can be any level, above, below or in between the others. The level shall be specified in the dedicated equipment specification.	

Performance criterion: **A**

6.6.2. Test setup

For table-top equipment

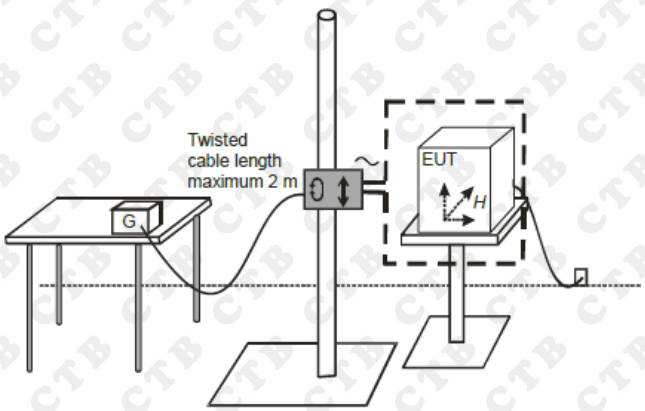

For floor standing equipment

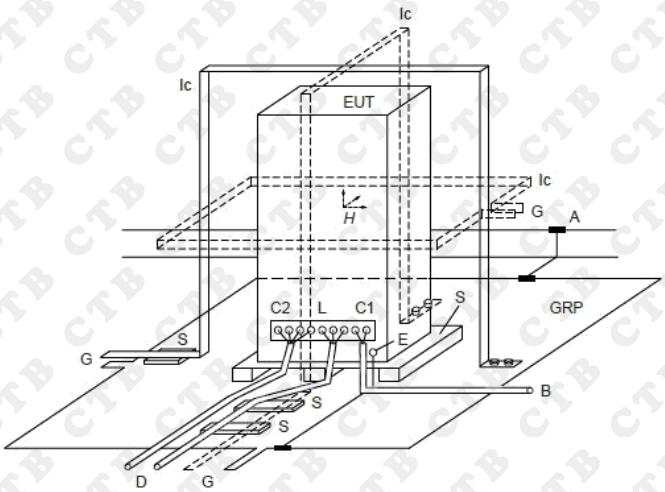

6.6.3. Test Procedure

Measurement was performed in shielded room.
Measurement procedure was applied according to EN 61000-4-8 clause 8.
The test method and equipment was specified by EN 61000-4-8.

6.6.4. Test Result

N/A

6.7. Voltage dips and Short interruptions

6.7.1. Test Levels and Performance Criterion

Residual voltage	Voltage Reduction	Period (Cycles)	Performance criterion
0%	100%	0,5	B
0%	100%	1	B
70	30	25/30 [a]	C
0	100	250/300 [b]	C
[a], [b] For example “25/30 cycles" means "25 cycles for 50 Hz test" or "30 cycles for 60 Hz test”.			

6.7.2. Test setup

6.7.3. Test Procedure

Measurement was performed in shielded room.
Measurement procedure was applied according to EN 61000-4-11 clause 8.
The test method and equipment was specified by EN 61000-4-11.

6.7.4. Test Result

N/A

7. Photographs of test setup

Photograph of test setup for Radiated emissions at frequencies up to 1 GHz
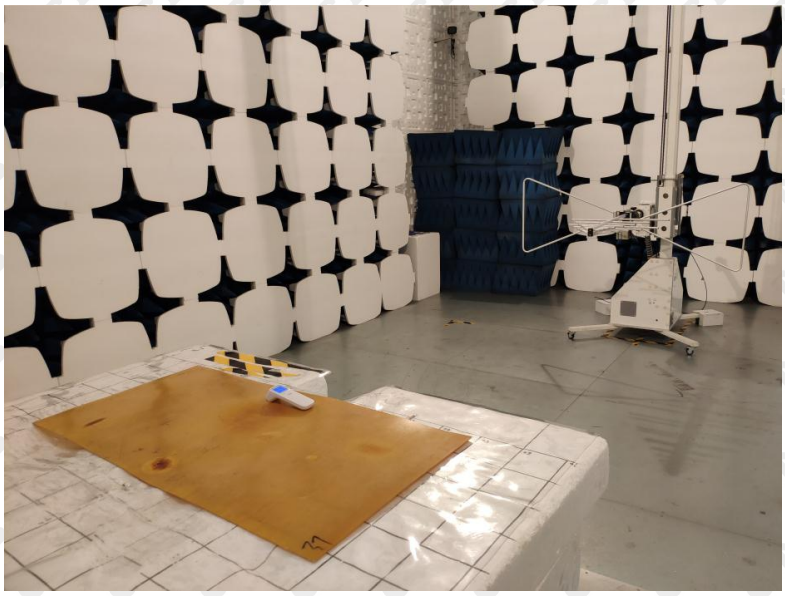

8. Photographs of EUT

Photographs of EUT

Photographs of EUT

Photographs of EUT

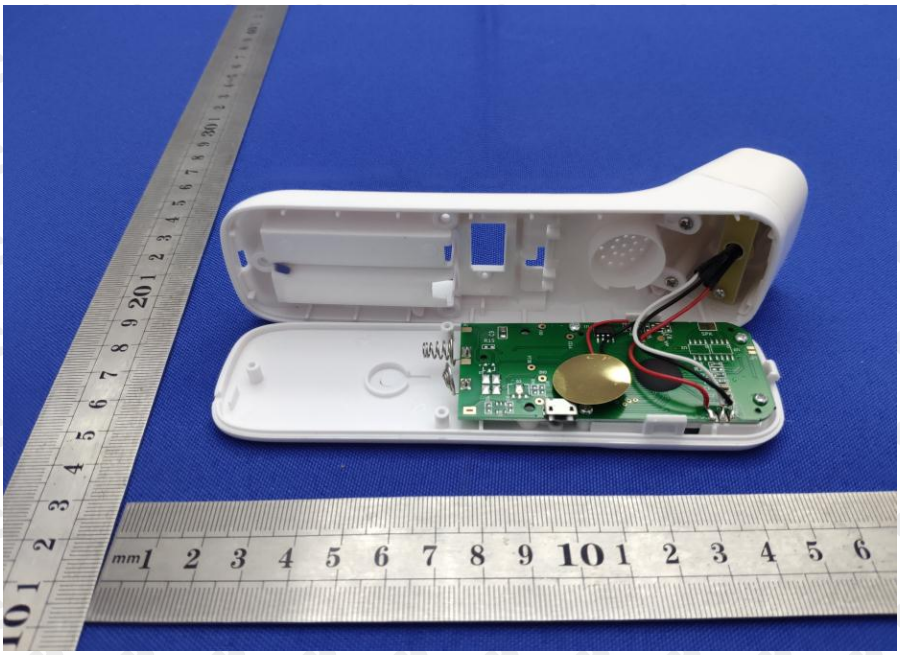

End of report